## High Voltage・Ultra High Speed Switching Transistors

### F3 series

| 品名 EIAJ No. | 品名 Type No. | 絶対最大定格 Absolute Maximum Ratings VCBO [V] | VCEO [V] | VEBO [V] | IC [A] | IB [A] | PT [W] | Tstg [℃] | Tj [℃] | 電気的・熱的特性 Electrical Characteristics VCEO(sus) (min) [V] | hFE (min) | VCE(sat) (max) [V] | VBE(sat) (max) [V] | θjc (max) [℃/W] | fT (std) [MHz] | ton (max) [μS] | ts (max) [μS] | tf (max) [μS] | 外形 No. Outline No. |
|---|---|---|---|---|---|---|---|---|---|---|---|---|---|---|---|---|---|---|---|
| 2SC3219 | T6V20F3 | 230 | 230 | 7 | 6 | 2 | 50 | −55～+150 | +150 | 200 | 10 | 1 | 1.5 | 2.5 | 20 | 0.3 | 0.5 | 0.1 | Fig. 1 |
| 3220 | T10W20F3 | | | | 10 | 4 | 80 | | | | | | | 1.56 | | | | | Fig. 3 |
| 3221 | T6M20F3 | | | | 6 | 2 | 80 | | | | | | | 1.56 | | | | | Fig. 4 |
| 3222 | T10M20F3 | | | | 10 | 4 | 100 | | | | | | | 1.25 | | | | | Fig. 5 |
| 3223 | T20M20F3 | | | | 20 | 7 | 200 | | | | | | | 0.62 | | | | | Fig. 6 |
| 3162 | T3V40F3 | 500 | 400 | 7 | 3 | 1 | 40 | −55～+150 | +150 | 400 | 10 | 1 | 1.5 | 3.13 | 20 | 0.3 | 1 | 0.1 | Fig. 1 |
| 3163 | T6V40F3 | | | | 6 | 2 | 50 | | | | | | | 2.5 | | | | | |
| 3164 | T10W40F3 | | | | 10 | 4 | 100 | | | | | | | 1.25 | | | | | Fig. 3 |
| 3165 | T3M40F3 | | | | 3 | 1 | 60 | | | | | | | 2.08 | | | | | Fig. 4 |
| 3166 | T6M40F3 | | | | 6 | 2 | 80 | | | | | | | 1.56 | | | | | |
| 3167 | T10M40F3 | | | | 10 | 4 | 100 | | | | | | | 1.25 | | | | | Fig. 5 |
| 3168 | T20M40F3 | | | | 20 | 7 | 200 | | | | | | | 0.63 | | | | | Fig. 6 |

## High Voltage・High Speed Switching Transistors

### FX series

| 品名 EIAJ No. | 品名 Type No. | 絶対最大定格 Absolute Maximum Ratings VCBO [V] | VCEO [V] | VEBO [V] | IC [A] | IB [A] | PT [W] | Tstg [℃] | Tj [℃] | 電気的・熱的特性 Electrical Characteristics VCEO(sus) (min) [V] | hFE (min) | VCE(sat) (max) [V] | VBE(sat) (max) [V] | θjc (max) [℃/W] | fT (std) [MHz] | ton (max) [μS] | ts (max) [μS] | tf (max) [μS] | 外形 No. Outline No. |
|---|---|---|---|---|---|---|---|---|---|---|---|---|---|---|---|---|---|---|---|
| 2SC4051 | T3V45FX | 600 | 450 | 7 | 3 | 1 | 40 | −55～+150 | +150 | 450 | 10 | 1 | 1.5 | 3.12 | 20 | 0.5 | 2 | 0.2 | Fig. 1 |
| 4052 | TP3V45FX | | | | 3 | 1 | 25 | | | | | | | 5 | | | | | Fig. 2 |
| 4053 | T5V45FX | | | | 5 | 2 | 50 | | | | | | | 2.5 | | | | | Fig. 1 |
| 4054 | TP5V45FX | | | | 5 | 2 | 30 | | | | | | | 4.16 | | | | | Fig. 2 |
| 4055 | T8V45FX | | | | 8 | 4 | 60 | | | | | | | 2.08 | | | | | Fig. 1 |
| 4056 | TP8V45FX | | | | 8 | 4 | 45 | | | | | | | 2.77 | | | | | Fig. 2 |
| 4057 | T8W45FX | | | | 8 | 4 | 80 | | | | | | | 1.56 | | | | | |
| 4058 | T10W45FX | | | | 10 | 4 | 100 | | | | | | | 1.25 | | | | | Fig. 3 |
| 4059 | T15W45FX | | | | 15 | 6 | 130 | | | | | | | 0.96 | | | | | |
| 4060 | T20W45FX | | | | 20 | 7 | 150 | | | | | | | 0.83 | | | | | |
| 3714 | T20W40FX | 500 | 400 | | 20 | 7 | 200 | | | 400 | | | | 0.625 | | | | 0.3 | Fig. 10 |

## 外形図 Outline Dimensions

[Unit : mm]

Fig. 1

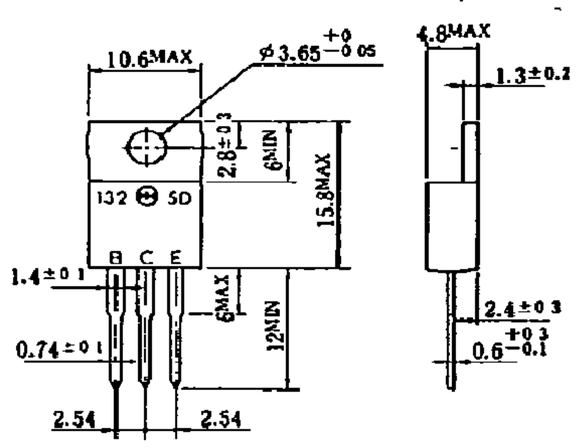


Fig. 2

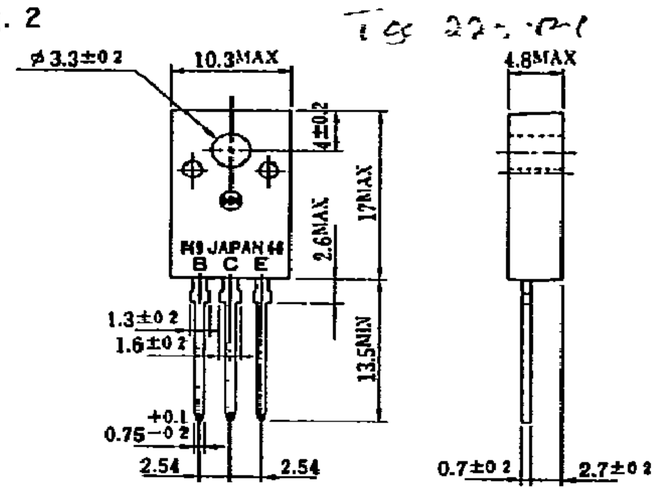

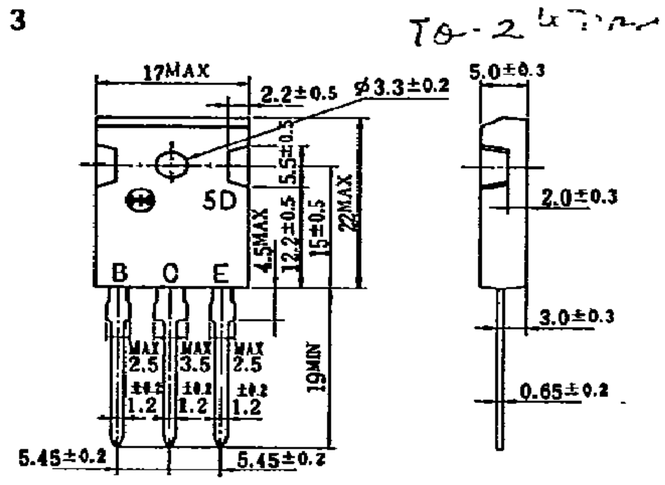
Fig. 3