Pomona®

Model 4619
Mounting Base Double Banana Jack & Binding Post, Miniature

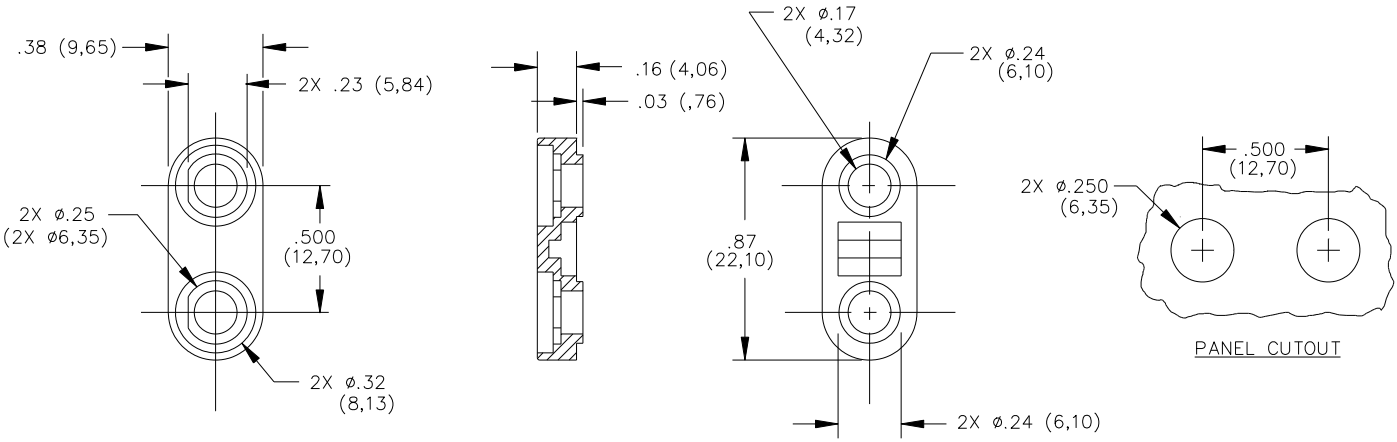

MATERIALS:
Body: Polycarbonate
Color: Black
Marking : Pomona Electronics

RATINGS:
Operating Temperature: +115° C. (+239° F.) Max.

ORDERING INFORMATION: 4619-*
*=Color, -0 Black
Ordering Example: 4619-0 Mounting Base Color is Black
Parts are packaged ten (10) per bag.
For use with Models 2142, 2143, 2382, 2383, 2439, 2440, 3542, 4022, 4773 and 4543.

All dimensions are in inches. Tolerances (except noted): .xx = ±.02" (,51 mm), .xxx = ± .005" (,127 mm).
All specifications are to the latest revisions. Specifications are subject to change without notice.
Registered trademarks are the property of their respective companies. Made in USA

Downloaded from Arrow.com.