RoHS
Available on commercial versions

1 Watt Glass Case Zener Diodes

Qualified per MIL-PRF-19500/115

Qualified Levels:
JAN, JANTX, and JANTXV

DESCRIPTION

This well established Zener diode series for the 1N3016B-1 through 1N3045B-1 JEDEC registration in the glass DO-41 package provides a glass hermetic seal for 6.8 to 110 volts. It is also well suited for high-reliability applications where it is available in JAN, JANTX, and JANTXV military qualifications. Lower voltages are also available in the 1N3821 through 1N3828 series (3.3 V to 7.5 V) in the same package (see separate data sheet).

Important: For the latest information, visit our website http://www.microsemi.com.

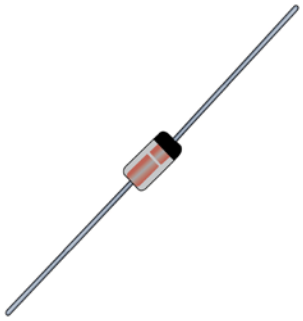

DO-41 Package

Also available in:

DO-213AB package
(surface mount)
1N3016BUR-1 – 1N3045BUR-1

FEATURES

- JEDEC registered 1N3016 through 1N3045 numbers.
- Zener voltage range: 6.8 volts to 110 volts.
- Hermetically sealed DO-41 glass package.
- Metallurgically bonded.
- Double plug construction.
- Voltage tolerances of 5%, 2%, and 1% available.
- JAN, JANTX, and JANTXV qualifications also available per MIL-PRF-19500/115. (See part nomenclature for all available options.)
- RoHS compliant versions available (commercial grade only).

APPLICATIONS / BENEFITS

- Regulates voltage over a broad operating current and temperature range.
- Wide selection from 6.8 to 110 volts.
- Low reverse (leakage) currents.
- Non-sensitive to ESD.
- Inherently radiation hard as described in Microsemi "MicroNote 050".

MAXIMUM RATINGS

Parameters/Test Conditions	Symbol	Value	Unit
Junction and Storage Temperature	T_J and T_{STG}	-55 to +175	ºC
Thermal Resistance Junction-to-Lead (1)	$R_{\Theta JL}$	80	ºC/W
DC Power Dissipation (2)	P_D	1.0	W
Forward Voltage @ 200 mA	V_F	1.2	V
Solder Temperature @ 10 s	T_{SP}	260	°C

Notes: 1. At L = 0.375 inches (10 mm) from body.
2. At $T_L \leq +95$ °C 3/8" (10 mm) from body or 1.0 watts at $T_L \leq +65$ °C when mounted on FR4 PC board as described for thermal resistance above (also see Figure 1). (Derate power to 0 at T_L = +175 °C).

MSC – Lawrence
6 Lake Street,
Lawrence, MA 01841
Tel: 1-800-446-1158 or
(978) 620-2600
Fax: (978) 689-0803

MSC – Ireland
Gort Road Business Park,
Ennis, Co. Clare, Ireland
Tel: +353 (0) 65 6840044
Fax: +353 (0) 65 6822298

Website:
www.microsemi.com

MECHANICAL and PACKAGING

- CASE: Hermetically sealed voidless hard glass with tungsten slugs.
- TERMINALS: Tin/lead or RoHS compliant matte/tin (commercial grade only) over copper.
- MARKING: Body coated in blue with part number.
- POLARITY: Cathode indicated by band.
- TAPE & REEL option: Standard per EIA-296. Consult factory for quantities.
- WEIGHT: 340 milligrams.
- See Package Dimensions on last page.

PART NOMENCLATURE

JAN 1N3016 B -1 e3

Reliability Level
JAN = JAN level
JANTX = JANTX level
JANTXV = JANTXV level
Blank = Commercial

JEDEC type number
(See Electrical Characteristics table)

Zener Voltage Tolerance
B = 5%
C = 2%
D = 1%

RoHS Compliance
e3 = RoHS compliant (available on commercial grade only)
Blank = non-RoHS compliant

Metallurgically Bonded DO-41

SYMBOLS & DEFINITIONS

Symbol	Definition
I_R	Reverse Current: The maximum reverse (leakage) current that will flow at the specified voltage and temperature.
I_Z, I_{ZT}, I_{ZK}	Regulator Current: The dc regulator current (I_Z), at a specified test point (I_{ZT}), near breakdown knee (I_{ZK}).
I_{ZM}	Maximum Regulator (Zener) Current: The maximum rated dc current for the specified power rating.
V_F	Maximum Forward Voltage: The maximum forward voltage the device will exhibit at a specified current.
V_R	Reverse Voltage: The reverse voltage dc value, no alternating component.
V_Z	Zener Voltage: The Zener voltage the device will exhibit at a specified current (I_Z) in its breakdown region.
Z_{ZT} or Z_{ZK}	Dynamic Impedance: The small signal impedance of the diode when biased to operate in its breakdown region at a specified rms current modulation (typically 10% of I_{ZT} or I_{ZK}) and superimposed on I_{ZT} or I_{ZK} respectively.

*ELECTRICAL CHARACTERISTICS @ 25°C

JEDEC TYPE NUMBER	NOMINAL ZENER VOLTAGE V_Z @ I_{ZT} (Note 1)	ZENER TEST CURRENT I_{ZT}	MAXIMUM ZENER IMPEDANCE (Note 3) Z_{ZT} @ I_{ZT}	Z_{ZK} @ I_{ZK}		MAXIMUM ZENER CURRENT I_{ZM} (Note 3)	MAXIMUM REVERSE LEAKAGE CURRENT† I_R @ V_R		MAXIMUM TEMP. COEFF. OF ZENER VOLTAGE α_{VZ}
	Volts	mA	Ohms	Ohms	mA	mA	µA	Volts	%/°C
1N3016B-1	6.8	37	3.5	700	1.0	140	150	5.2	0.061
1N3017B-1	7.5	34	4.0	700	.5	125	100	5.7	0.065
1N3018B-1	8.2	31	4.5	700	.5	115	50	6.2	0.070
1N3019B-1	9.1	28	6	700	.5	105	25	6.9	0.073
1N3020B-1	10	25	7	700	.25	95	25	7.6	0.076
1N3021B-1	11	23	8	700	.25	85	10	8.4	0.078
1N3022B-1	12	21	9	700	.25	80	10	9.1	0.081
1N3023B-1	13	19	10	700	.25	74	10	9.9	0.085
1N3024B-1	15	17	14	700	.25	63	10	11.4	0.088
1N3025B-1	16	15.5	16	700	.25	60	10	12.2	0.089
1N3026B-1	18	14	20	750	.25	52	10	13.7	0.091
1N3027B-1	20	12.5	22	750	.25	47	10	15.2	0.092
1N3028B-1	22	11.5	23	750	.25	43	10	16.7	0.093
1N3029B-1	24	10.5	25	750	.25	40	10	18.2	0.094
1N3030B-1	27	9.5	35	750	.25	34	10	20.6	0.096
1N3031B-1	30	8.5	40	1000	.25	31	10	22.8	0.098
1N3032B-1	33	7.5	45	1000	.25	28	10	25.1	0.099
1N3033B-1	36	7.0	50	1000	.25	26	10	27.4	0.100
1N3034B-1	39	6.5	60	1000	.25	23	10	29.7	0.101
1N3035B-1	43	6.0	70	1500	.25	21	10	32.7	0.102
1N3036B-1	47	5.5	80	1500	.25	19	10	35.8	0.102
1N3037B-1	51	5.0	95	1500	.25	18	10	38.8	0.103
1N3038B-1	56	4.5	110	2000	.25	17	10	42.6	0.103
1N3039B-1	62	4.0	125	2000	.25	15	10	47.1	0.104
1N3040B-1	68	3.7	150	2000	.25	14	10	51.7	0.104
1N3041B-1	75	3.3	175	2000	.25	12	10	56.0	0.105
1N3042B-1	82	3.0	200	3000	.25	11	10	62.2	0.106
1N3043B-1	91	2.8	250	3000	.25	10	10	69.2	0.108
1N3044B-1	100	2.5	350	3000	.25	9.0	10	76.0	0.11
1N3045B-1	110	2.3	450	4000	.25	8.3	10	83.6	0.11

*JEDEC Registered Data. †Not JEDEC Data.

NOTES: 1. Zener Voltage (V_Z) is measured with junction in thermal equilibrium with still air at a temperature of 25°C. The test currents (I_{ZT}) at nominal voltages provide a constant 0.25 watts.

2. The Zener impedance is derived when a 60 cycle ac current having an rms value equal to 10% of the dc Zener current (I_{ZT} or I_{ZK}) is superimposed on I_{ZT} or I_{ZK}. Zener impedance is measured at 2 points to ensure a sharp knee on the breakdown curve and to eliminate unstable units. See MicroNote 202 for variation in dynamic impedance with different Zener currents.

3. These values of I_{ZM} may often be exceeded in the case of individual diodes. The values shown are calculated for a unit at the high voltage end of its tolerance range. Allowance has also been made for the rise in Zener voltage above V_{ZT} that results from Zener impedance and the increase in junction temperature as a unit approaches thermal equilibrium at a dissipation of 1 watt. The I_{ZM} values shown for +/- 5% tolerance units may be used with little error for +/-10% tolerance units, but should be reduced by 7% to include a +/- 20% tolerance unit near the high voltage end of its tolerance range.

GRAPHS

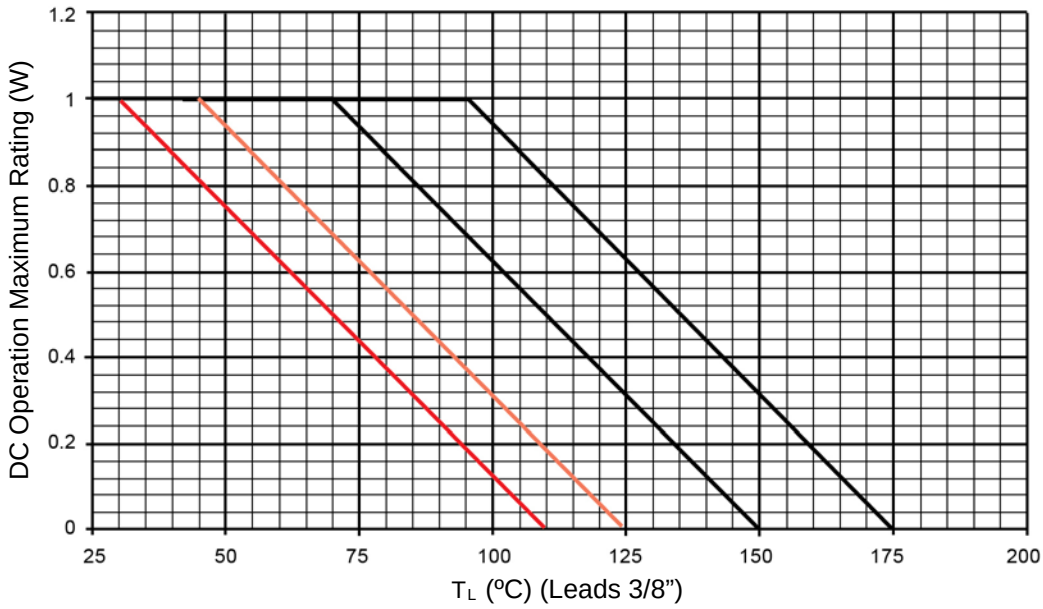

FIGURE 1
Temperature-Power Derating Curve

PACKAGE DIMENSIONS

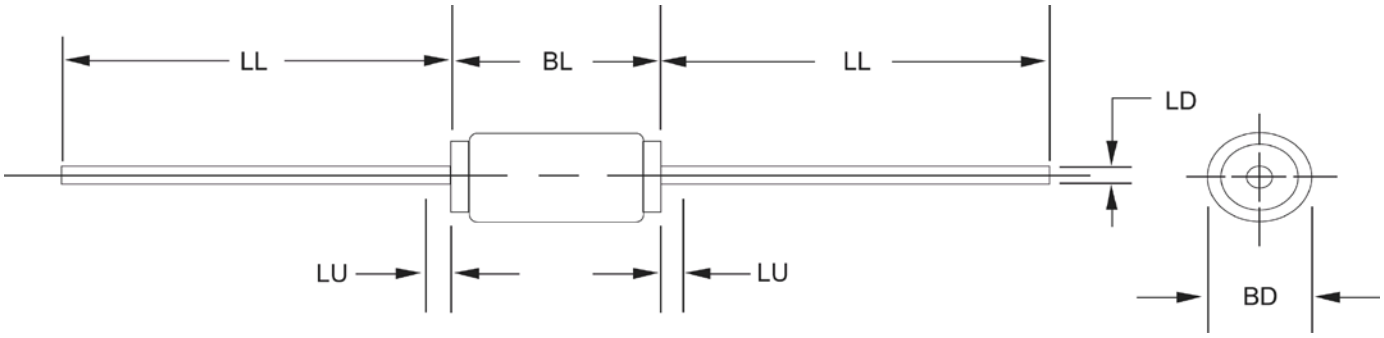

NOTES:

1. Dimensions are in inches. Millimeters are given for general information only.
2. Package contour optional with BD and length BL. Heat slugs, if any, shall be included within this cylinder length but shall not be subject to minimum limit of BD.
3. Within this zone lead, diameter may vary to allow for lead finishes and irregularities other than heat slugs.
4. In accordance with ASME Y14.5M, diameters are equivalent to Φx symbology.

Ltr	DIMENSIONS				Notes
	INCH		MILLIMETERS		
	Min	Max	Min	Max	
BD	0.080	0.107	2.03	2.72	2
BL	0.160	0.205	4.06	5.21	2
LD	0.028	0.034	0.71	0.86	
LL	1.000	-	25.40	-	
LU	-	0.050	-	1.27	3