RAK14002 WisBlock Touch Sensor Module Datasheet

Overview

Description

The RAK14002 WisBlock Touch Sensor module is a 3-channel Capacitive Touch Sensor. This module is based on the Microchip CAP1293 Capacitive Touch Sensor, and it has a ready to use SW library and tutorial makes it easy to build a touchpad, swipe detector.

Features

- Three (3) Capacitive Touch Sensor Inputs
- Low Power Operation 50 µA quiescent current in standby mode
- Proximity Detection
- Multiple Button Pattern Detection
- Power button support
- 3.3 V power supply
- I2C Compliant Communication Interface
- Chipset: Microchip CAP1293
- **Module size**: 25 x 35 mm

Specifications

Overview

Mounting

The RAK14002 module can be mounted on the IO slot of the WisBlock Base board. Figure 1 shows the mounting mechanism of the RAK14002 module on a WisBlock Base module, such as the RAK5005-O.

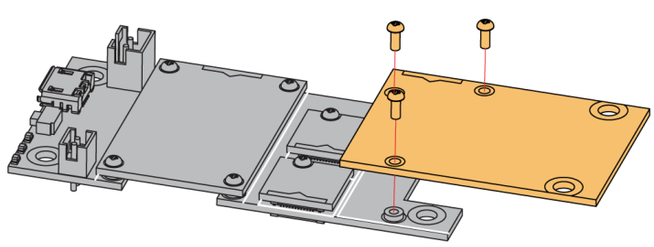

Figure 1: RAK14002 Mounting

Hardware

The hardware specification is categorized into five parts. It shows the chipset of the module and discusses the pinouts and its corresponding functions and diagrams. It also covers the electrical and mechanical parameters that include the tabular data of the functionalities and standard values of the RAK14002 WisBlock Touch Sensor Module.

Chipset

Vendor	Part number
Microchip	CAP1293

> 📝 **NOTE:**
>
> The default 7-bit slave address is 0x50.

Pin Definition

The RAK14002 WisBlock module comprises a standard 40-pin WisConnector. The WisConnector allows the RAK14002 module to be mounted on a WisBlock Base board, such as RAK5005-O. The pin order of the connector and the pinout definition is shown in Figure 2.

> 📝 **NOTE:**
>
> - I2C related pins, IO6, VDD, and GND are connected to this module.
> - IO6 interrupt output pin, Low active, internal pull-up.

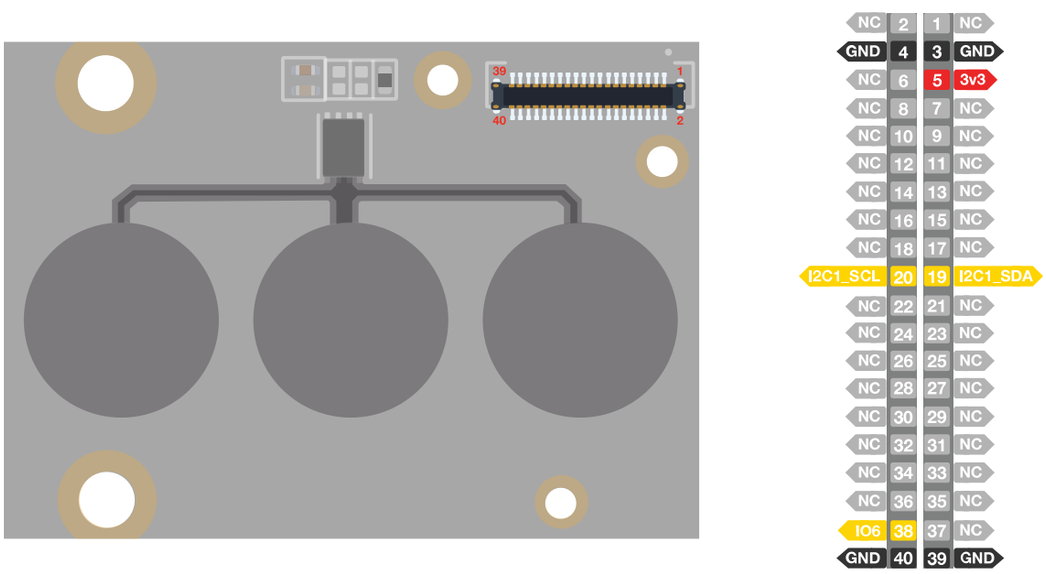

Figure 2: RAK14002 WisBlock Touch Sensor Module Pinout

Electrical Characteristics

Recommended Operating Conditions

Symbol	Description	Min.	Nom.	Max.	Unit
V_{DD}	Power supply for the module	3.0		5.5	V
V_{POR}	Power-On reset voltage		1	1.3	V
I_{DD}	Capacitive Sensing Active	-	500	750	uA
I_{DSLEEP_3V}	Deep Sleep State current	-	5	-	uA
I_{STBY_DEF}	Standby state active 70 ms cycle time		120	170	uA
I_{STBY_LP}	Standby state active 140 ms cycle time		50		uA

Mechanical Characteristics

Board Dimensions

Figure 3 shows the dimensions and the mechanic drawing of the RAK14002 module.

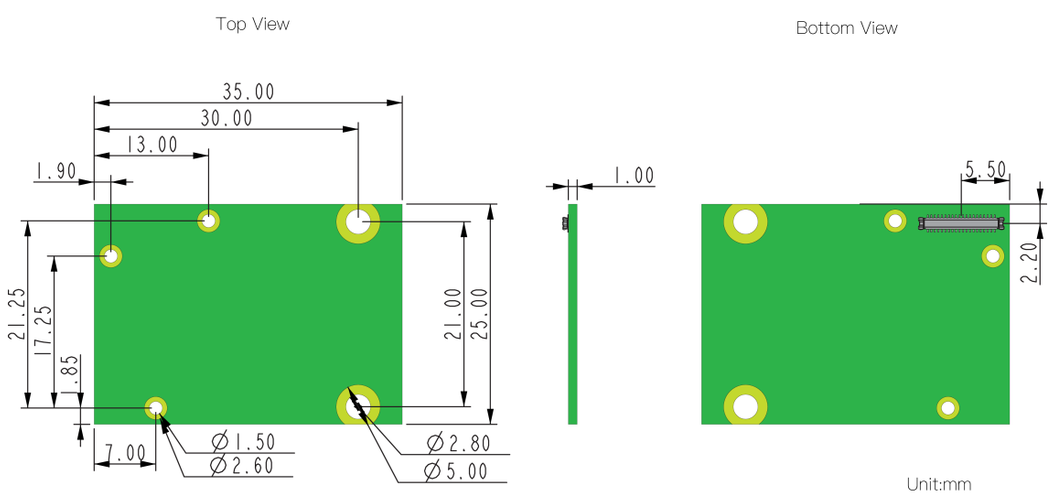

Figure 3: RAK14002 WisBlock 3-channel Touchpad Mechanic Drawing

WisConnector PCB Layout

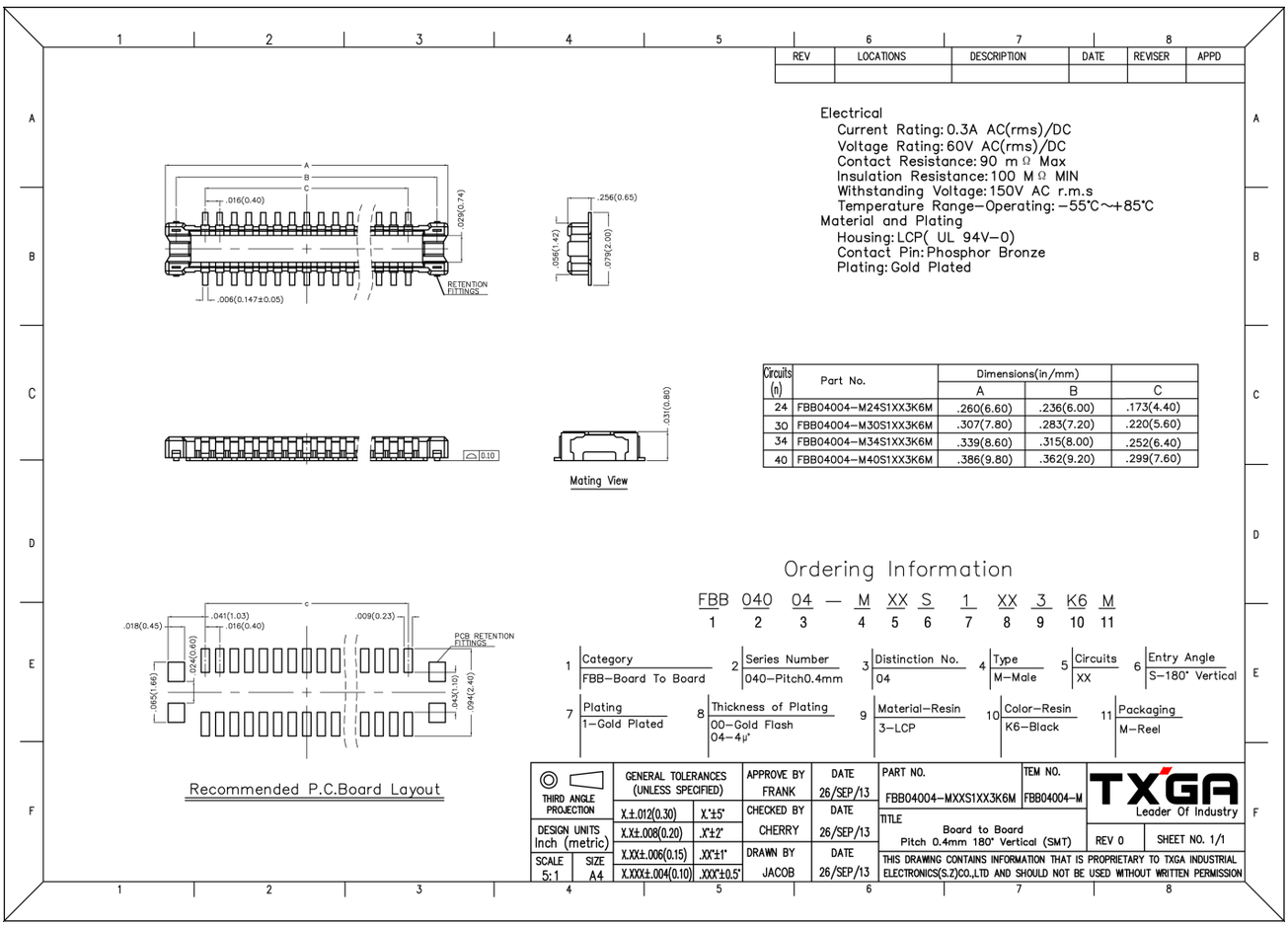

Circuits (n)	Part No.	Dimensions(in/mm) A	B	C
24	FBB04004–M24S1XX3K6M	.260(6.60)	.236(6.00)	.173(4.40)
30	FBB04004–M30S1XX3K6M	.307(7.80)	.283(7.20)	.220(5.60)
34	FBB04004–M34S1XX3K6M	.339(8.60)	.315(8.00)	.252(6.40)
40	FBB04004–M40S1XX3K6M	.386(9.80)	.362(9.20)	.299(7.60)

Figure 4: WisConnector PCB footprint and recommendations

Schematic Diagram

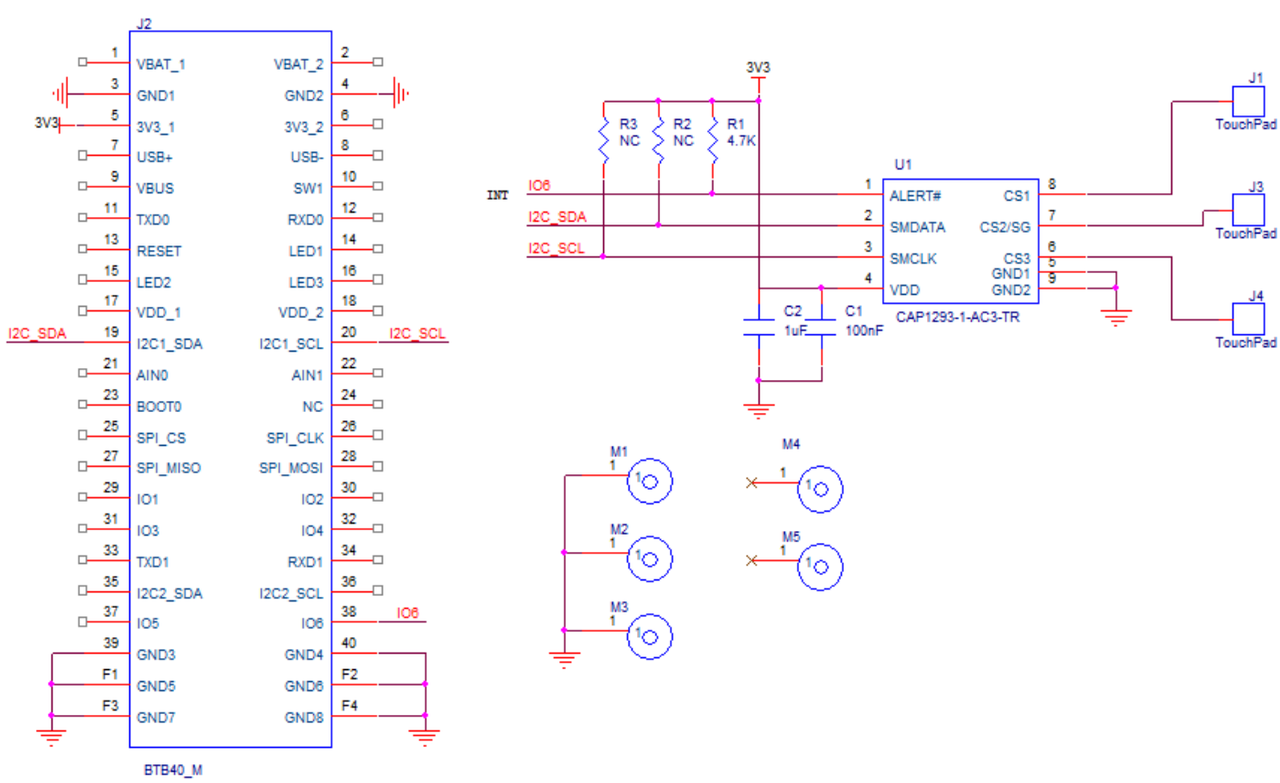

Figure 5: RAK14002 WisBlock 3-channel Touchpad Schematic