RAK5146 WisLink LPWAN Concentrator Datasheet

Overview

Product Description

The **RAK5146** is an LPWAN Concentrator Module with mini-PCIe form factor based on Semtech SX1303 and SX126X for Listen Before Talk feature, which enables easy integration into an existing router or other network equipment with LPWAN Gateway capabilities. It can be used in any embedded platform offering a free mini-PCIe slot with SPI/USB connection. Furthermore, ZOE- M8Q GPS chip is integrated onboard.

This module is an exceptional, complete, and cost-efficient gateway solution offering up to 10 programmable parallel demodulation paths, 8 x 8 channel LoRa packet detectors, 8 x SF5-SF12 LoRa demodulators, and 8 x SF5-SF10 LoRa demodulators. It is capable of detecting an uninterrupted combination of packets at 8 different spreading factors and 10 channels with continuous demodulation of up to 16 packets. This product is best for smart metering fixed networks and Internet-of-Things (IoT) applications.

Product Features

- Designed based on **Mini PCI-e form factor**
- **SX1303 baseband processor** emulates 8 x 8 channels LoRa packet detectors, 8x SF5-SF12 LoRa demodulators, 8x SF5-SF10 LoRa demodulators, one 125/250/500 kHz high-speed LoRa demodulator, and one (G)FSK demodulator
- 3.3 V **Mini PCI-e**, compatible with **3G/LTE card** of Mini PCI-e type
- Tx power up to 27 dBm, Rx sensitivity down to -139 dBm @ SF12, BW 125 kHz
- Supports **global license-free frequency band** (EU868, CN470, US915, AS923, AU915, KR920, IN865)
- Supports optional **SPI/USB** interfaces.
- Listen Before Talk
- Fine Timestamp
- Built-in **ZOE-M8Q** GPS module

Specifications

Overview

The overview shows the top and back views of the RAK5146 board. It also presents the block diagram that discusses how the board works.

Board Overview

RAK5146 is a compact LPWAN Gateway Module, making it suitable for integration in systems where mass and size constraints are essential. It has been designed with the PCI Express Mini Card form factor in mind, so it can easily become a part of products that comply with the standard, where they allow cards with a thickness of at least 5.5 mm.

The board has two UFL interfaces for the LoRa and GNSS antennas and a standard 52-pin connector (mPCIe).

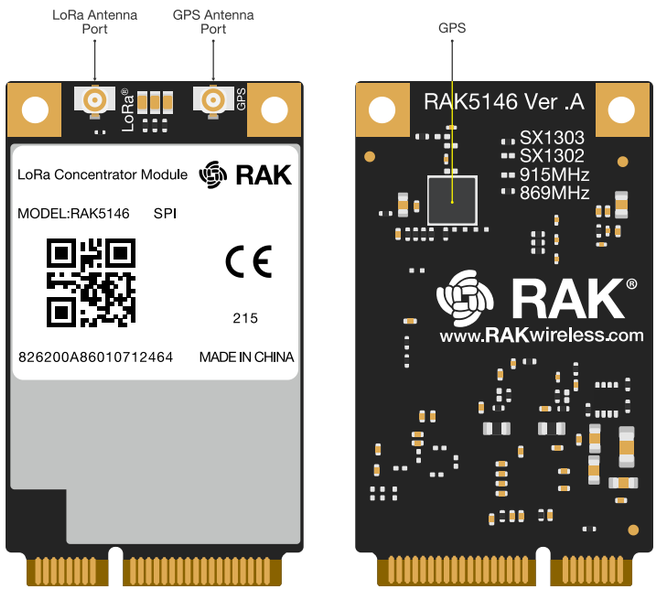

Figure 1: Board Overview

Block Diagram

The RAK5146 concentrator is equipped with one SX1303 chip and two SX1250. The first chip is utilized for the RF signal and the core of the device, while the latter provides the related LoRa modem and processing functionalities. Additional signal conditioning circuitry is implemented for PCI Express Mini Card compliance, and one UFL connectors are available for external antenna integration.

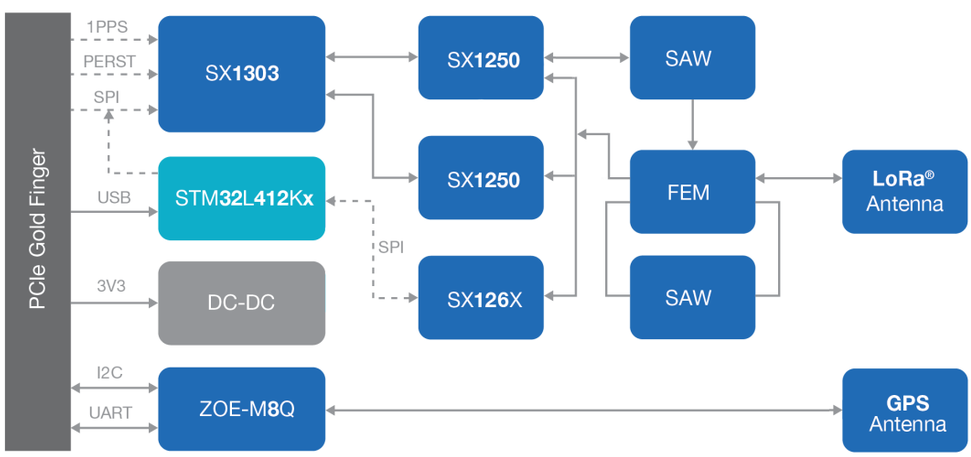

Figure 2: Block Diagram

Hardware

The hardware is categorized into seven (7) parts. It discusses the interfacing, pinouts, and its corresponding functions and diagrams. It also covers the parameters and standard values of the board.

Interfaces

- **Power Supply** - The RAK5146 concentrator module must be supplied through the 3.3Vaux pins by a DC power supply. The voltage needs to be stable since the current drawn can vary significantly during operation based on the power consumption profile of the SX1303 chip (for more information, see the SX1303 Datasheet).
- **SPI Interface** - SPI interface mainly provides for the Host_SCK, Host_MISO, Host_MOSI, Host_CSN pins of the system connector. The SPI interface gives access to the configuration register of SX1303 via a synchronous full-duplex protocol. Only the slave side is implemented.

- **USB Interface** - The USB interface mainly provides for the USB_D+, USB_D- pins of the system connector. The USB interface gives access to the configuration register of SX1303 via an MCU STM32L412KBU6. Only the slave side is implemented.
- **UART and I2C Interface** - RAK5146 integrates a ZOE-M8Q GPS module which has UART and I2C interface. The PINs on the golden finger provide a UART connection and an I2C connection, which allows direct access to the GPS module. The PPS signal is not only connected to SX1303 internally but also connected to the golden finger which can be used by the host board.
- **GPS_PPS** - RAK5146 includes the GPS_PPS input for received packets time-stamped and Fine timestamp.
- **RESET** - RAK5146 SPI card includes the RESET active-high input signal to reset the radio operations as specified by the SX1303 Specification. RAK5146 USB card's RESET is controlled by MCU.
- **Antenna RF Interface** - The module has one RF interface over a standard UFL connector (Hirose U. FL-R-SMT) with a characteristic impedance of 50 Ω. The RF port (J1) supports both Tx and Rx, providing the antenna interface.

Pin Definition

Pinout Diagram

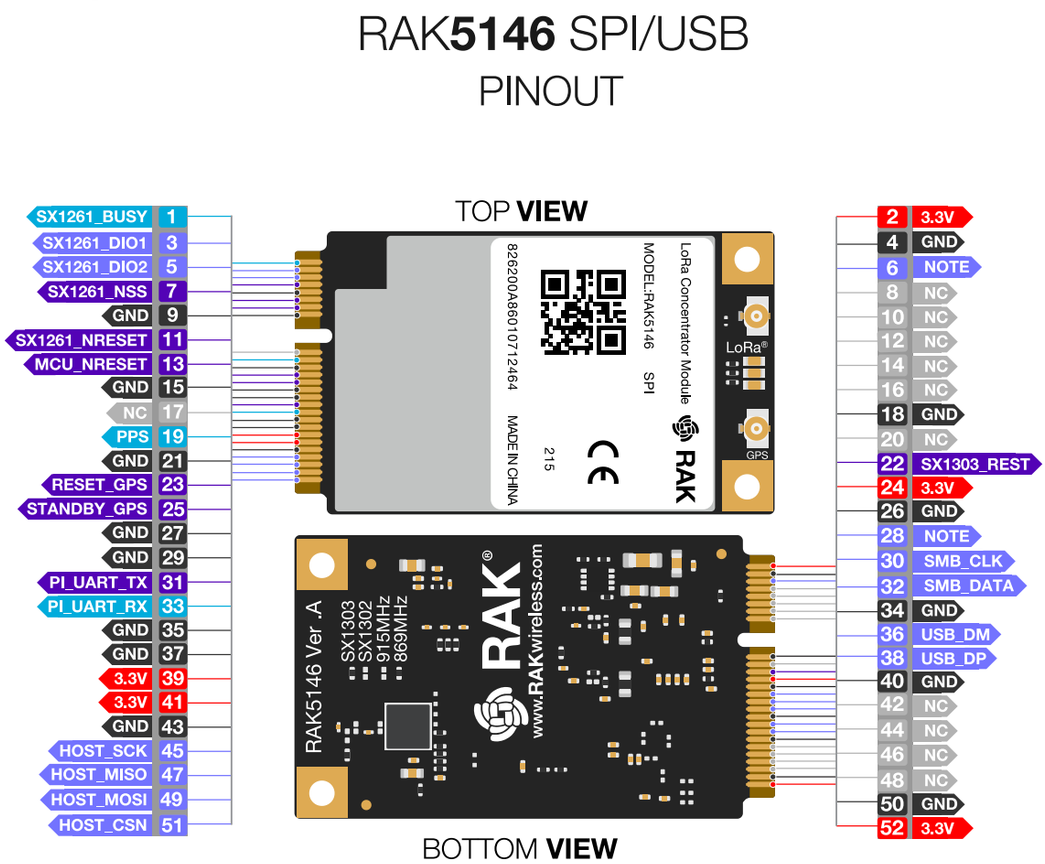

Figure 3: Pinout Diagram

Pinout Description

Type	Description
IO	Bidirectional
DI	Digital input
DO	Digital output
OC	Open collector
OD	Open drain
PI	Power input
PO	Power output
NC	No connection

Pin No.	mPCIe Pin Rev. 2.0	RAK5146 Pin	Type	Description	Remarks
1	WAKE#	SX1261_BUSY	DO	No connection by default	Reserved for future applications
2	3.3Vaux	3V3	PI	3.3 V_{DC} supply	
3	COEX1	SX1261_DIO1	IO	No connection by default	Reserved for future applications
4	GND	GND		Ground	
5	COEX2	SX1261_DIO2	IO	No connection by default	Reserved for future applications
6	1.5V	GPIO(6)	IO	No connection by default	Connect to the SX1302's GPIO (6)
7	CLKREQ#	SX1261_NSS	DI	No connection by default	Reserved for future applications
8	UIM_PWR	NC		No connection	
9	GND	GND		Ground	
10	UIM_DATA	NC		No connection	
11	REFCLK-	SX1261_NRESET	DI	No connection by default	Reserved for future application
12	UIM_CLK	NC		No connection	
13	REFCLK+	MCU_NRESET	DI	RESET signal for MCU of RAK5146-USB	Active low
14	UIM_RESET	NC		No connection	
15	GND	GND		Ground	
16	UIM_VPP	NC		No connection	
17	RESERVED	NC		No connection	

Pin No.	mPCIe Pin Rev. 2.0	RAK5146 Pin	Type	Description	Remarks
18	GND	GND		Ground	
19	RESERVED	PPS	DO	Time pulse output	Leave open if not in use
20	W_DISABLE#	NC		No connection	
21	GND	GND		Ground	
22	PERST#	SX1303_RESET	DI	RAK5146-SPI reset input	Active high, ≥100 ns for SX1302 reset
23	PERn0	RESET_GPS	DI	GSP module ZOE-M8Q reset input	Active low, leave open if not in use
24	3.3Vaux	3v3	PI	3.3 V_{DC} supply	
25	PERp0	STANDBY_GPS	DI	GPS module ZOE-M8Q external interrupt input	Active low, leave open if not in use
26	GND	GND		Ground	
27	GND	GND		Ground	
28	1.5V	GPIO(8)		Connect to the SX1303's GPIO (8)	
29	GND	GND		Ground	
30	SMB_CLK	I2C_SCL	IO	HOST SCL	Connect to GPS module ZOE-M8Q's SCL internally, leave open if not in use
31	PETn0	PI_UART_TX	DI	HOST UART_TX	Connect to GPS module ZOE-M8Q's UART_RT internally, leave open if not in use
32	SMB_DATA	I2C_SDA	IO	HOST SDA	Connect to GPS module ZOE-M8Q's SDA internally, leave open if not in use
33	PETp0	PI_UART_RX	DO	HOST UART_RX	` Connect to GPS module ZOE-M8Q's UART_TX internally, leave open if not in use
34	GND	GND		Ground	

Pin No.	mPCIe Pin Rev. 2.0	RAK5146 Pin	Type	Description	Remarks
35	GND	GND		Ground	
36	USB_D-	USB_DM	IO	USB differential data (-)	Require differential impedance of 90 Ω
37	GND	GND		Ground	
38	USB_D+	USB_DP	IO	USB differential data (+)	Require differential impedance of 90 Ω
39	3.3Vaux	3V3	PI	3.3 V_{DC} supply	
40	GND	GND		Ground	
41	3.3Vaux	3V3	Pi	3.3 V_{DC} supply	
42	LED_WWAN#	NC		No connection	
43	GND	GND		Ground	
44	LED_WLAN#	NC		No connection	
45	RESERVED	HOST_SCK	IO	Host SPI SCK	
46	LED_WPAN#	NC		No connection	
47	RESERVED	HOST_MISO	IO	Host SPI MISO	
48	1.5V	NC		No connection	
49	RESERVED	HOST_MOSI	IO	Host SPI MOSI	
50	GND	GND		Ground	
51	RESERVED	HOST_CSN	IO	Host SPI CSN	
52	3.3Vaux	3V3	PI	3.3 V_{DC} supply	

RF Characteristics

Operating Frequencies

The board supports the following LoRaWAN frequency channels, allowing easy configuration while building the firmware from the source code.

Region	Frequency (MHz)
Europe	EU868
North America	US915
Asia	AS923
Australia	AU915
Korea	KR920
India	IN865
China	CN470

RF Characteristics

The following table gives typically sensitivity level of the RAK5146 concentrator module.

Signal Bandwidth (kHz)	Spreading Factor	Sensitivity (dBm)
125	12	-139
125	7	-125
250	7	-123
500	12	-134
500	7	-120

Electrical Requirements

Stressing the device above one or more of the ratings listed in the Absolute Maximum Rating section may cause permanent damage. These are stress ratings only. Operating the module at these or any conditions other than those specified in the Operating Conditions sections of the specification should be avoided. Exposure to Absolute Maximum Rating conditions for extended periods may affect device reliability.

The operating condition range defines those limits within which the functionality of the device is guaranteed. Where application information is given, it is advisory only and does not form part of the specification.

Absolute Maximum Rating

The limiting values given below are following the Absolute Maximum Rating System (IEC 134).

Symbol	Description	Condition	Min	Max
3.3Vaux	Module supply voltage	Input DC voltage at 3.3Vaux pins	-0.3 V	3.6 V
USB	USB D+/D- pins	Input DC voltage at USB interface pins	-	3.6 V
RESET	RAK5146 reset input	Input DC voltage at RESET input pin	-0.3 V	3.6 V
SPI	SPI interface	Input DC voltage at SPI interface pin	-0.3 V	3.6 V
GPS_PPS	GPS 1 PPS input	Input DC voltage at GPS_PPS input pin	-0.3 V	3.6 V
Rho_ANT	Antenna ruggedness	Output RF load mismatch ruggedness at ANT1	-	10:1 VSWR
Tstg	Storage temperature		-40° C	85° C

⚠️ **WARNING**

The product is not protected against overvoltage or reversed voltages. If necessary, voltage spikes exceeding the power supply voltage specification, given in the table above, must be limited to values within the specified boundaries by using appropriate protection devices.

Maximum ESD

Parameter	Min	Typical	Max	Remarks
ESD_HBM			1000 V	Charged Device Model JESD22-C101 CLASS III
ESD_CDM			1000 V	Charged Device Model JESD22-C101 CLASS III

📝 **NOTE**

Although this module is designed to be as robust as possible, electrostatic discharge (ESD) can damage this module. This module must be protected at all times from ESD when handling or transporting. Static charges may easily produce potentials of several kilovolts on the human body or equipment, which can discharge without detection. Industry-standard ESD handling precautions should be used at all times.

Power Consumption

Mode	Condition	Min	Typical	Max
Active Mode (TX)	The power of the TX channel is 27 dBm and 3.3 V supply.	511 mA	512 mA	513 mA
Active Mode (RX)	TX disabled and RX enabled.	70 mA	81.6 mA	101 mA

Power Supply Range

Input voltage at **3.3Vaux** must be above the normal operating range minimum limit to switch on the module.

Symbol	Parameter	Min	Typical	Max
3.3Vaux	Module supply operating input voltage	3 V	3.3 V	3.6 V

Mechanical Characteristics

The board weighs 16.3 grams, it is 30 mm wide and 50.96 mm tall. The dimensions of the module fall completely within the **PCI Express Mini Card Electromechanical Specification**, except for the card's thickness (5.5 mm at its thickest).

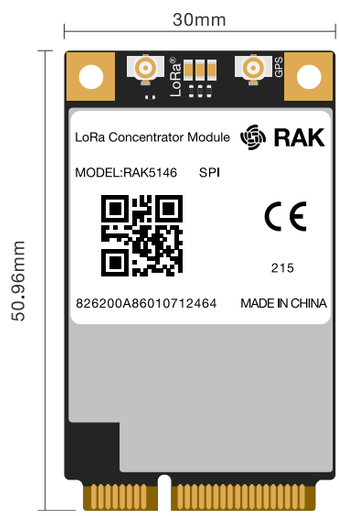

Figure 4: Dimensions

Environmental Requirements

Operating Conditions

Parameter	Min	Typical	Max	Remarks
Normal operating temperature	-40° C	+25° C	+85° C	Normal operating temperature range (fully functional and meet 3GPP specifications)

> 📝 **NOTE**
>
> Unless otherwise indicated, all operating condition specifications are at an ambient temperature of 25° C. Operation beyond the operating conditions is not recommended and extended exposure beyond them may affect device reliability.

Schematic Diagram

RAK5146 concentrator module refers to Semtech's reference design for SX1303. The SPI interface can be used on the PCIe connector. **Figure 5** shows the minimum application schematic of the RAK5146. You should use at least 3.3 V / 1 A DC power, connect the SPI interface to the main processor.

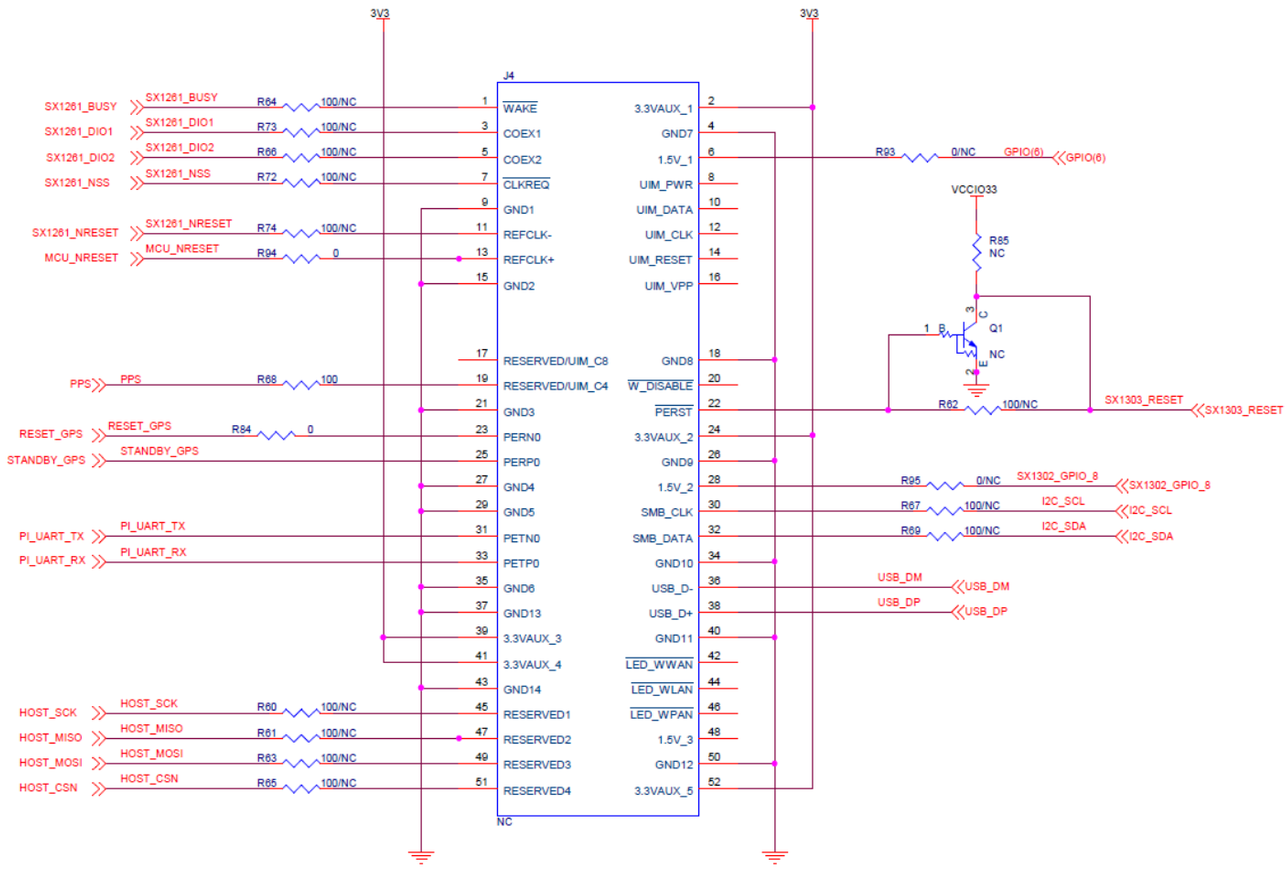

Figure 5: Schematic Diagram

Models / Bundles

In general, the RAK5146's variation is defined as **RAK5146 - XYZ**, where **X, Y, Z is the model variant**. Take a look at the tables below to know the variants and their specification.

Symbol	Description
X - Supported region	1 - US915; 2 - EU868
Y - Interface type	1 - SPI; 2 - USB
Z - Additional features	0 - No additional features; 2 - LBT; 5 - GPS; 6 - LBT+GPS

Model	Frequency	USB	SPI	LBT	GPS
RAK5146-126	US915	√		√	√
RAK5146-122	US915	√		√	
RAK5146-125	US915	√			√
RAK5146-120	US915	√			
RAK5146-115	US915		√		√
RAK5146-110	US915		√		
RAK5146-226	EU868	√		√	√
RAK5146-222	EU868	√		√	
RAK5146-225	EU868	√			√
RAK5146-220	EU868	√			
RAK5146-215	EU868		√		√
RAK5146-210	EU868		√		

Certification

Last Updated: 5/18/2023, 7:25:59 AM